Front Axle Disconnect Delete Kit

www.TERAFLEX.com

 # 1938300

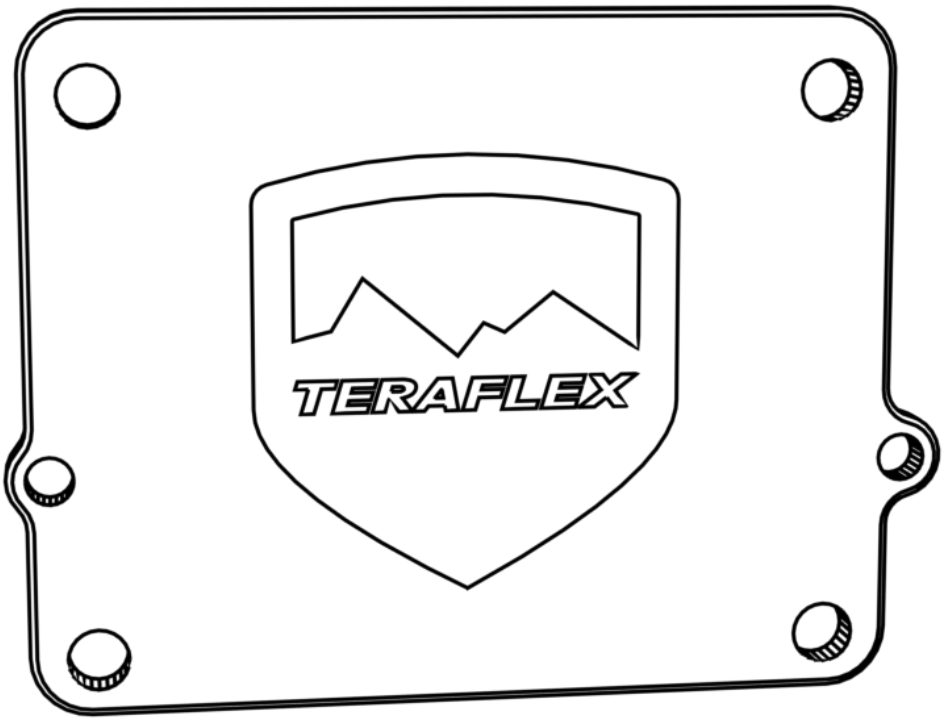

Important Notes:

Prior to beginning this install, read the instructions thoroughly to familiarize yourself with the required steps. Evaluate if you are experienced and capable to personally perform these modifications. A factory service manual should be used in conjunction with these installation instructions.

This product will change the highway handling characteristics of your vehicle, exercise caution. After altering the suspension it is always advisable to have an alignment done by a competent 4 wheel drive shop or by an alignment shop that is experienced with lifted 4 wheel drive vehicles.

Refer to the parts list to ensure that all necessary components and hardware has been included. If any parts are missing please contact your local TeraFlex dealer for assistance.

When reinstalling OEM hardware, refer to the torque specs given in the Factory Service Manual.

Tools Needed:

- **Metric sockets**
- **Torque wrench**
- **RTV Silicon**

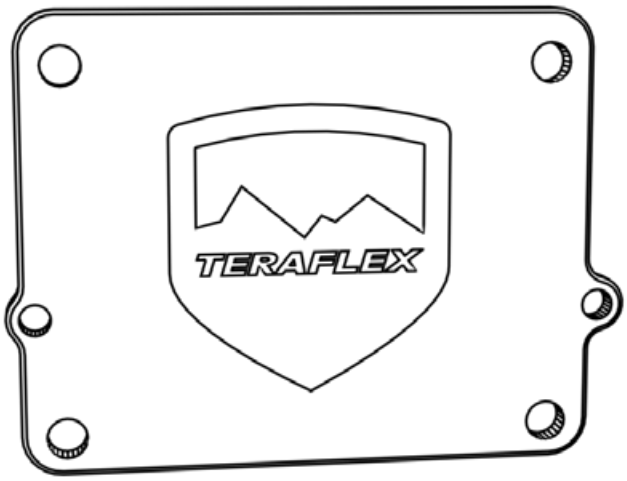

Part Number	Name	Qty.
15-37-001-001	Bracket (S), Axle, Jeep JL, FAD Delete Plate	1

INSTALLATION INSTRUCTIONS

REMOVE THE FRONT AXLE DISCONNECT (FAD) SKID PLATE AND DISCARD

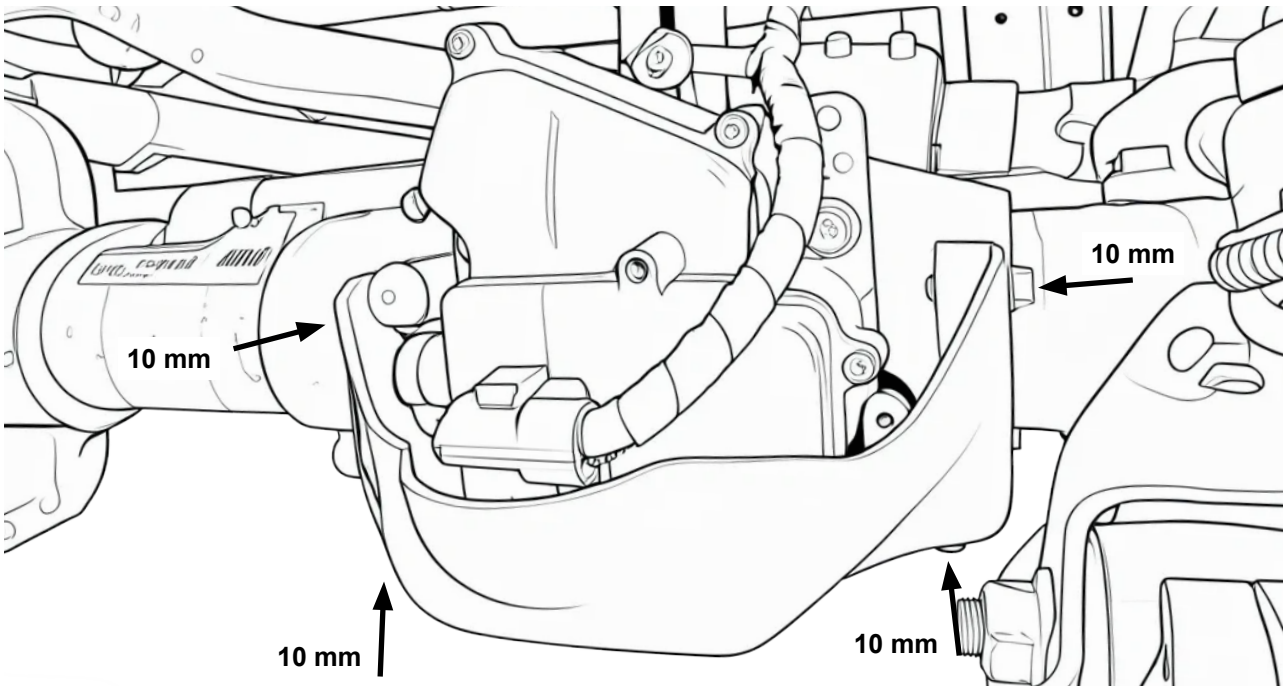

UNPLUG THE FAD WIRE HARNESS AND REMOVE THE 4 MOUNTING BOLTS

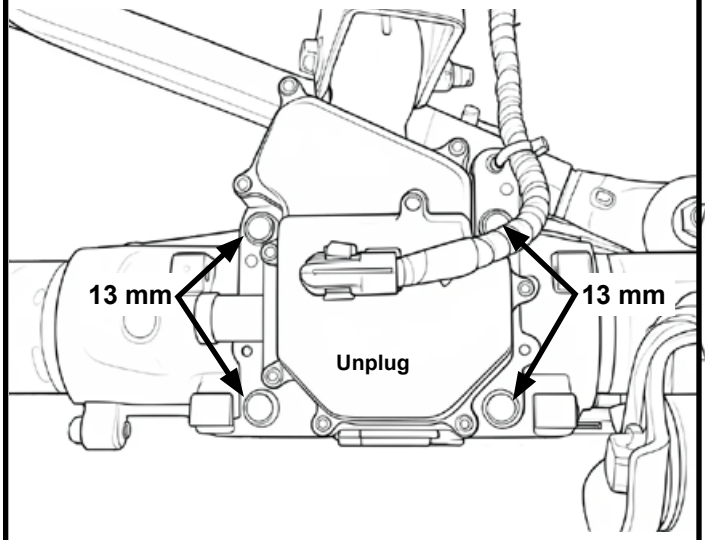

Unplug the FAD and zip tie the wire harness to the frame.

Check the axle seal and replace as needed.

SEAL THE OPENING USING RTV SILICON

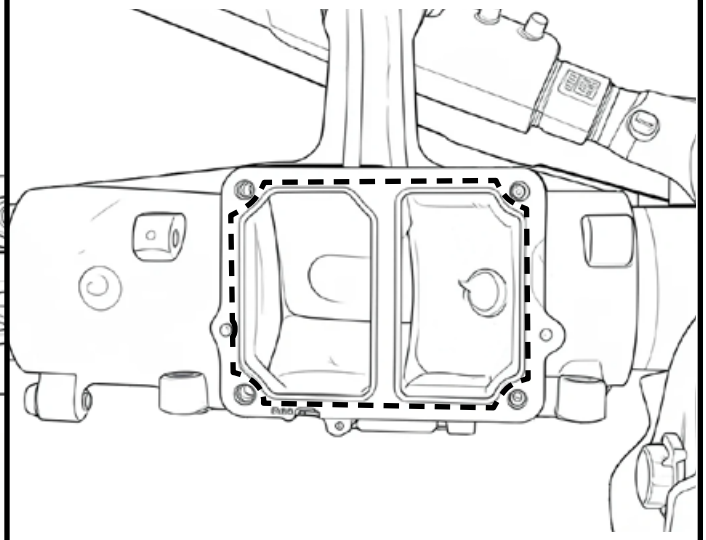

Apply a thin bead of RTV silicon around the opening in the axle as indicated by the dotted line.

INSTALL THE DELETE PLATE
REUSING THE FAD BOLTS

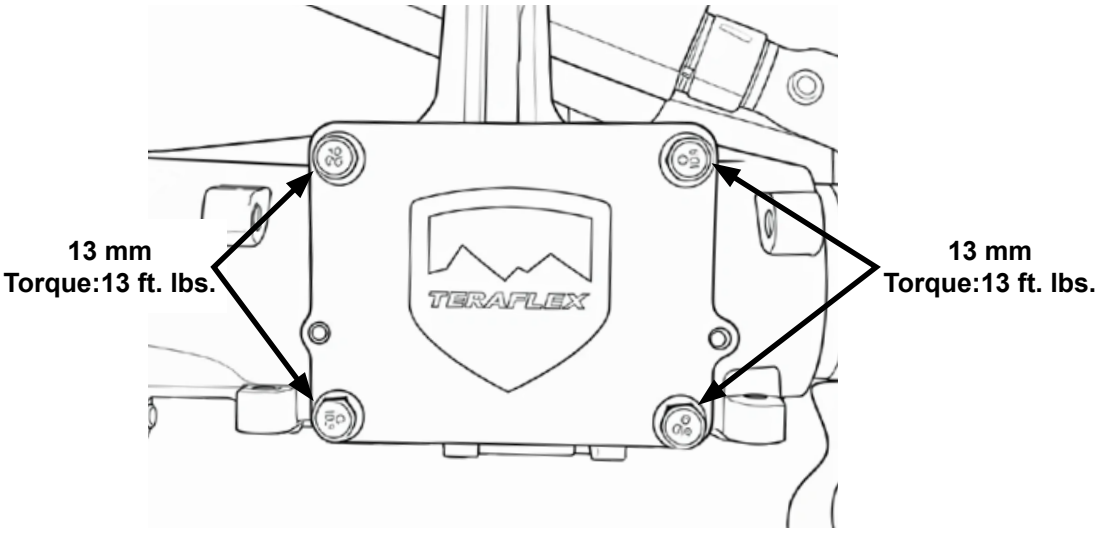

The FAD has to be removed from the computer. A programmer (Tazer or similar) will be needed to turn off the front axle.

MAINTENANCE INFORMATION:
It is the buyer's responsibility to have all suspension, drivetrain, steering, and other components checked for proper tightness and torque after the first 100 miles and every 3000 miles after that.

NOTICE TO INSTALLER:
The enclosed "Warning to Driver" sticker must be installed in the vehicle in driver's view. This sticker is to act as a constant safety reminder when operating the vehicle. It is your responsibility as the equipment installer to install the provided sticker and to forward the product instructions to the vehicle's owner for review. If a "Warning to Driver" sticker or product installation guide were not included in the kit, FREE replacement stickers and instructions are available by request. It is the installer's duty to ensure a safe and controllable vehicle after the modifications have been performed.

WARNING TO DRIVER:
This vehicle has been modified to enhance off road performance and has unique handling characteristics. Use in harsh environments can cause extreme stress on the components. Vehicle should be inspected after being off road to make sure that all the components are in working order and safe to travel on the highway. All fasteners should be checked so that they are at the correct torque specifications as the vibration and stresses from off roading may cause critical fasteners to work loose. Extra care should be taken to inspect the critical components, steering, and brake systems. During each oil change components such as arms, tie rod ends, etc should be greased and checked for excessive wear. Any worn components should be replaced. When returning to the pavement always set or restore tire air pressure to the factory recommendation and connect or engage any disabled sway bar mechanisms. Because of the higher center of gravity and larger tires, this vehicle handles and reacts differently than many passenger cars, both on and off road. You must drive it safely! Extreme care should be taken to prevent vehicle rollover or loss of control, which can result in serious injury or death. Avoid sudden sharp turns or abrupt maneuvers. Generally, braking performance and capabilities are decreased when significantly larger/heavier tires are used, especially when used in combination with transfer case low-range reduction kits. Take this into consideration while driving. Do not add, alter or fabricate any factory or aftermarket parts to increase vehicle height over the intended height of the TeraFlex product purchased. Mixing component brand is not recommended. TeraFlex Inc. will not be responsible for any altered product or any improper installation or use of our products. We will be happy to answer any questions concerning the design, function, and correct use of our products. It is ultimately the buyer's responsibility to have all bolts/nuts checked for tightness after the first 100 miles and then every 3000 miles. Wheel alignment, steering system, suspension and drive line systems must be inspected by a qualified professional mechanic at least every 3000 miles.

TERAFLEX LIMITED WARRANTY:
THIS LIMITED WARRANTY GIVES YOU SPECIFIC LEGAL RIGHTS AND YOU MAY ALSO HAVE OTHER RIGHTS, WHICH VARY FROM STATE TO STATE. THE LIMITED WARRANTY CAN ALSO BE FOUND ONLINE AT WWW.TERAFLEX.COM/WARRANTY OR IN THE DOCUMENTATION WE PROVIDE WITH THE PRODUCT. WE WARRANT THAT DURING THE WARRANTY PERIOD, THE PRODUCT WILL BE FREE FROM DEFECTS IN MATERIALS AND WORKMANSHIP. WE LIMIT THE DURATION AND REMEDIES OF ALL IMPLIED WARRANTIES, INCLUDING WITHOUT LIMITATION THE WARRANTIES OF MERCHANTABILITY AND FITNESS FOR A PARTICULAR PURPOSE TO THE DURATION OF THIS EXPRESS LIMITED WARRANTY. SOME STATES DO NOT ALLOW LIMITATIONS ON HOW LONG AN IMPLIED WARRANTY LASTS, SO THE ABOVE LIMITATION MAY NOT APPLY TO YOU. OUR RESPONSIBILITY FOR DEFECTIVE GOODS IS LIMITED TO REPAIR, REPLACEMENT OR REFUND AS DESCRIBED BELOW IN THIS WARRANTY STATEMENT.

WARNING: Neither TeraFlex, Inc. nor the seller will be liable for any loss, damage, or injury directly or indirectly arising from the use of or inability to determine the use of these products. Before using, the user shall determine the suitability of the product(s) for its intended use(s), and the user shall assume all responsibility and risk in connection therewith.

WHO MAY USE THIS WARRANTY?
TeraFlex, Inc. ("we") extend this limited warranty only to the consumer who originally purchased the product ("you"). It does not extend to any subsequent owner or other transferee of the product.

WHAT DOES THIS WARRANTY COVER?
This limited warranty covers defects in materials and workmanship of the TeraFlex product purchased by you (the "product") for the Warranty Period as defined below.

WHAT DOES THIS WARRANTY NOT COVER?
This limited warranty does not cover any damage due to: (a) transportation; (b) storage; (c) improper use; (d) failure to follow the product instructions or to perform any preventive maintenance; (e) modifications; (f) unauthorized repair; (g) normal wear and tear; (h) product finish; (i) improperly installed or applied products; (j) improperly maintained products; (k) products used for any racing or competition; or (l) external causes such as accidents, abuse, neglect or other actions or events beyond our reasonable control. The following will VOID the warranty: (a) improper installation; (b) failure to properly maintain product; (c) use of product for racing or competition; (d) neglect or abuse.

WHAT IS THE PERIOD OF COVERAGE?
This limited warranty starts on the date of your purchase and lasts as set forth below (the "Warranty Period"). The Warranty Period is not extended if we repair or replace the product. We may change the availability of this limited warranty at our discretion, but any changes will not be retroactive. All of the foregoing warranties are limited to the original purchaser and the original vehicle the product was installed on:

Lifetime Warranty:
- The following suspension components: coil springs, bump stops, control arms, track bars, sway bars & links and IR bushings
- 9550 Shocks: shocks & stabilizer
- The following steering components: ball joint, tie rod, drag link, tie rod ends, big brake kit, big rotor kits and brake lines.
- The following body armor components: skid plates, racks, Alpha carrier & components, and cb mounts.
- Wheels & wheel adapter spacers.

3 Year Warranty:
- Delta Brake Kit.
- Transfer Case; short shaft kits, 2WD low range.
- ST Dual Rate Pneumatic Front Sway Bar.

1 Year Warranty:
- Falcon Shocks: all Falcon products including 1 series, 2 series, and 3 series shocks, as well as Nexus series stabilizers
- Axle Assemblies & Axle Housings: Tera60, CRD60, Tera44, Tera30, inner & outer knuckles, axle shafts and full float conversion kits.
- Bushings: Alpine control arm and track bar (does not include IR).
- Driveshaft & Driveshaft Components: CV driveshafts, Rzeppa CV kit and yokes.
- Recovery Equipment: tow strap, tree strap and d-rings.

90 Day Warranty:
- Paint & powder coat finishes: defect coverage only - does not cover any standard aesthetic wear caused by use/abuse.

No Warranty:
- Wearable items; brake rotors, brake pads.

WHAT ARE YOUR REMEDIES UNDER THIS WARRANTY?
With respect to any defective product during the Warranty Period, we will, in our sole discretion, either: (a) repair or replace such product (or the defective part) free of charge or (b) refund the purchase price of such product. We will also pay for shipping and handling fees to return the repaired or replacement product to you if we elect to repair or replace the defective product.

HOW DO YOU OBTAIN WARRANTY SERVICE?
To obtain warranty service, call our Customer Service Department at (801) 713-3314, Monday – Friday, 8:00 AM – 5:00 PM MST. Closed Saturday, Sunday & all major holidays. All returns must be accompanied by proof of purchase or original invoice. It is the customer's responsibility to remove the product from the vehicle. Inbound shipping charges (from you to us) are the responsibility of the customer. We will pay the return freight.

LIMITATION OF LIABILITY
THE REMEDIES DESCRIBED ABOVE ARE YOUR SOLE AND EXCLUSIVE REMEDIES AND OUR ENTIRE LIABILITY FOR ANY BREACH OF THIS LIMITED WARRANTY. OUR LIABILITY SHALL UNDER NO CIRCUMSTANCES EXCEED THE ACTUAL AMOUNT PAID BY YOU FOR THE DEFECTIVE PRODUCT, NOR SHALL WE UNDER ANY CIRCUMSTANCES BE LIABLE FOR ANY CONSEQUENTIAL, INCIDENTAL, SPECIAL OR PUNITIVE DAMAGES OR LOSSES, WHETHER DIRECT OR INDIRECT. SOME STATES DO NOT ALLOW THE EXCLUSION OR LIMITATION OF INCIDENTAL OR CONSEQUENTIAL DAMAGES, SO THE ABOVE LIMITATION OR EXCLUSION MAY NOT APPLY TO YOU.

COPYRIGHT
©Copyright 2025. All rights reserved, TeraFlex Inc. Reproduction of this instruction document and/or any of its contents without written permission is strictly prohibited. TeraFlex® is a registered trademark of TeraFlex Inc.
TeraFlex Inc. reserves the right to update, discontinue, redesign, modify finish, part number or component build parts if deemed necessary without written notice. TeraFlex Inc., and any associated dealers are not responsible for misprints or typographical errors that may have inadvertently been made within this instruction sheet.

Please reach out to the TeraFlex customer service with any questions regarding the installation of products or the limited warranty.

TERAFLEX
5680 West Dannon Way
West Jordan, UT. 84081
Phone/801.713.3314
Fax/801.713.2313
www.teraflex.com